Kelvinator
COMMERCIAL

Refrigeration Equipment
2-Door Under Counter Freezer
48" Long

ITEM # _____

MODEL # _____

NAME # _____

SIS # _____

AIA # _____

738266 (KCHUC48F) 2-Door Under Counter Freezer 48" Long

Short Form Specification

Item No. _____

2-door freezer counter top, 35.5 inches tall, with exterior back panel, exterior bottom panel, and exterior top panel in galvanized steel, exterior side panel in 430 stainless steel; interior back, top and bottom panels in 304 stainless steel. Fin & tube condenser to improve the performances in high temperature environments. Automatic Defrost Cooling System and temperature control. Vinyl heavy duty adjustable, easy to handle and clean shelves. External temperature display.

R290 gas in refrigeration circuit.

ETL Safety and Sanitation certified.

3/5 Years warranty.

APPROVAL: _____

Main Features

- External temperature display.
- Removable gasket for easy cleaning operations.
- Fin & Tube Condenser improves performance in high temperature environments.
- Automatic Defrost Cooling System provides worry-free performance.
- Electronic Temperature Control, quick and simple to set, with control display for easy monitoring.
- Heavy duty Vinyl coated steel shelves.
- Cabinet completely insulated with high density polyurethane for low environmental impact.
- Adjustable shelves for flexible storage
- Back bottom mounted cooling unit guarantee an easy access and cleaning.
- Removable rubber bumper guards for airflow spacing and shock absorption

Construction

- Stainless steel interior and exterior, durable and easy to clean for daily commercial use.
- Self-closing door with 90-degree stay-open feature.
- White polystyrene interior side panels, for high impact resistance
- Pre-wired heavy duty power cord.
- Heavy duty door hinges.
- Heavy duty casters.
- Magnetic gasket removable without tools for easy cleaning.
- Stainless steel worktop, durable functionality

Sustainability

- CFC and HCFC free, highly ecological refrigerant type: R290 (ecological gas in foam: cyclopentane). Hydrocarbon refrigerant gas R290 for the lowest environmental impact (GWP=3), to reduce green house and ozone depletion effects.
- High efficiency components to minimize the energy consumption still guaranteeing the highest performances.
- Hydrocarbon refrigerant gas R290 for the lowest environmental impact (GWP=3) - CFC and HCFC free.
- 60 mm insulation for energy saving.

Optional Accessories

- 1 Adjustable Foot PNC 206445 ❑

Kelvinator COMMERCIAL

Refrigeration Equipment
2-Door Under Counter Freezer
48" Long

Front

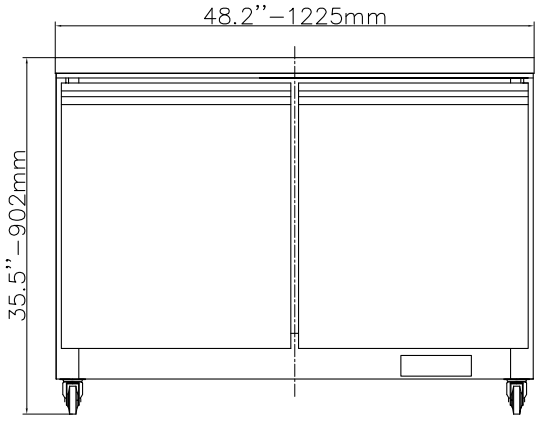

Side

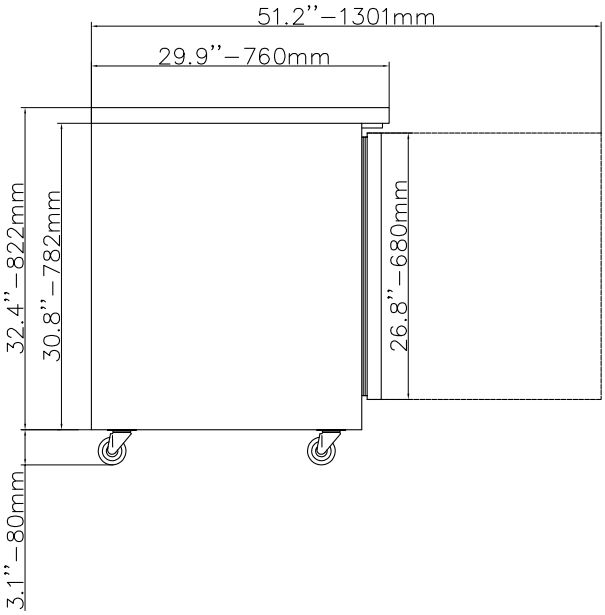

EI = Electrical connection

Electric

Supply voltage:	115 V/1 ph/60 Hz
Electrical power, max:	0.41 kW
Plug type:	USA NEMA 5-15P

Capacity:

Gross capacity:	12 cu.feet

Key Information:

Number and type of grids (included):	2 - Vinyl-Coated Steel
Warranty:	3 / 5 years
Door hinges:	1 Left+1 Right
Capacity:	12 cu.ft.
External dimensions, Width:	48 1/4" (1225 mm)
External dimensions, Depth:	29 15/16" (760 mm)
External dimensions, Height:	35 1/2" (902 mm)
Internal Dimensions (depth):	22 13/16" / (580 mm)
Internal Dimensions (height):	23 1/2" / (597 mm)
Internal Dimensions (width):	42 1/2" / (1080 mm)
Shipping height:	38 3/16" (970 mm)
Shipping weight:	273 lbs (124 kg)
Shipping volume:	34.66 ft^3 (0.98 m^3)
Type of external material:	Stainless Steel
Type of internal material:	Polystyrene
Approvals	ETL C&US;ETL SANITATION

Refrigeration Data

Condenser type:	Fin & tube
Operating temperature min.:	-9.4 °F
Compressor power:	1/3 hp
Operating temperature max.:	8.6 °F
Defrost type:	Auto Defrost

Sustainability

Current consumption:	4 Amps
Refrigerant type:	R290
GWP Index:	3
Refrigerant weight:	100 g

Intertek Intertek 3 YEAR PARTS & LABOR 5 YEAR COMPRESSOR WARRANTY 15A 125V NEMA 5-15P

The company reserves the right to make modifications to the products without prior notice. All information correct at time of printing.

Kelvinator Commercial is a pending or registered trademark of Electrolux Consumer Products, Inc., and is used under a license from Electrolux Consumer Products, Inc.